- :
-
-
-
-
-
-
-
-
-

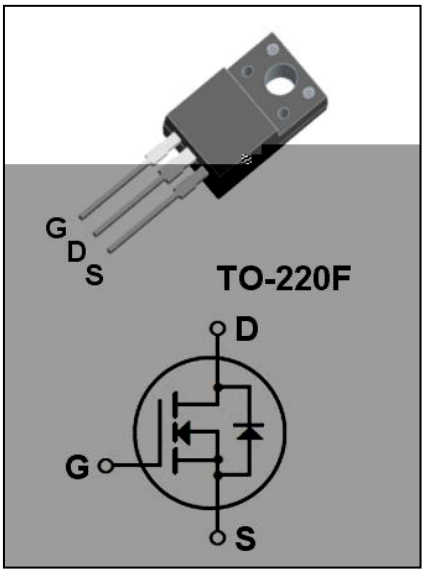
G
D
S
TO-220F
D
G
S

		±	
	)		

5 HL

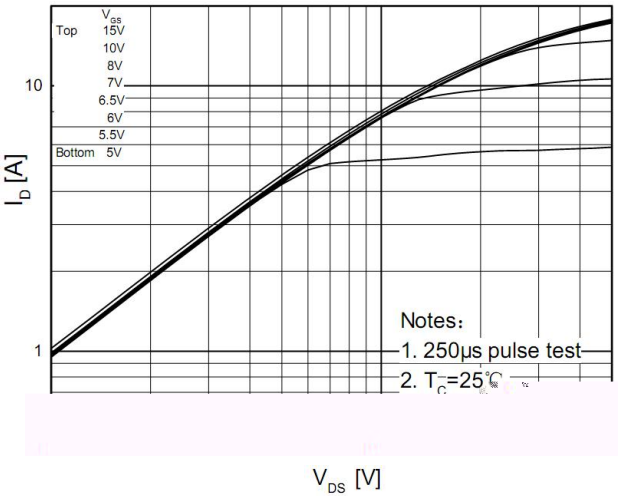
Top
V_{GS}
15V
10V
8V
7V
6.5V
6V
5.5V
Bottom 5V
10
1
I_D [A]
Notes:
1. 250μs pulse test
2. T_C=25℃
V_{DS} [V]

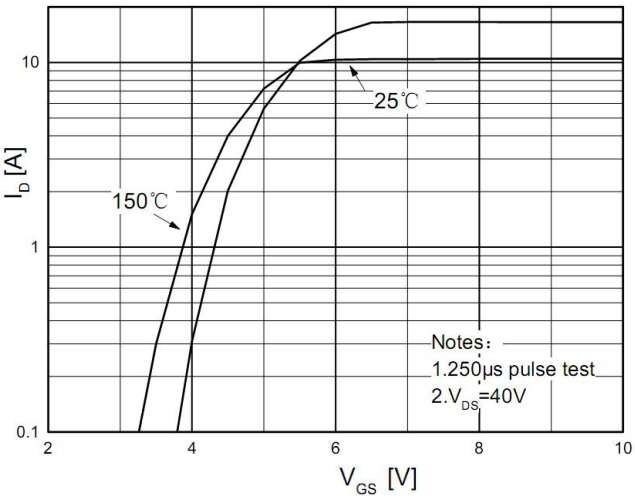
10
1
0.1
I_D [A]
25℃
150℃
Notes:
1.250μs pulse test
2.V_{DS}=40V
2
4
6
8
10
V_{GS} [V]

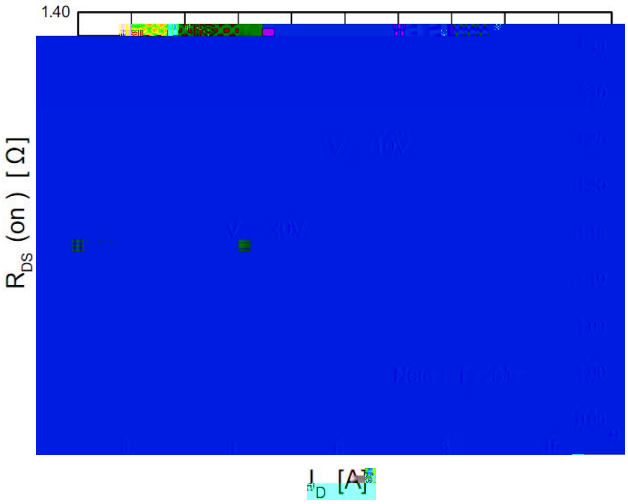
1.40
R_{DS} (on) [Ω]
I_D [A]

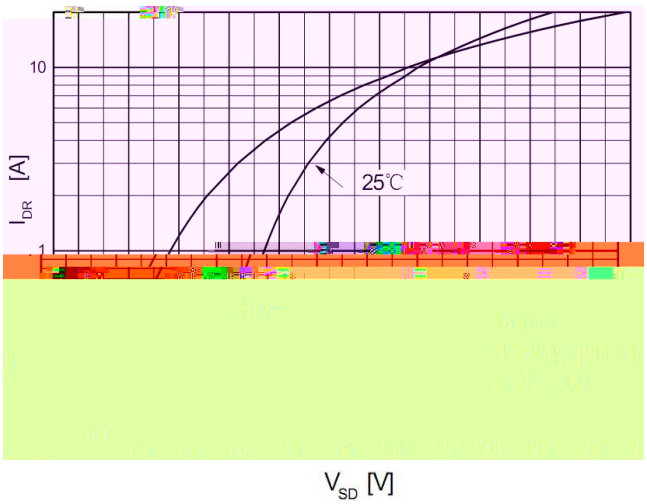
10
1
I_{DR} [A]
25℃
V_{SD} [V]

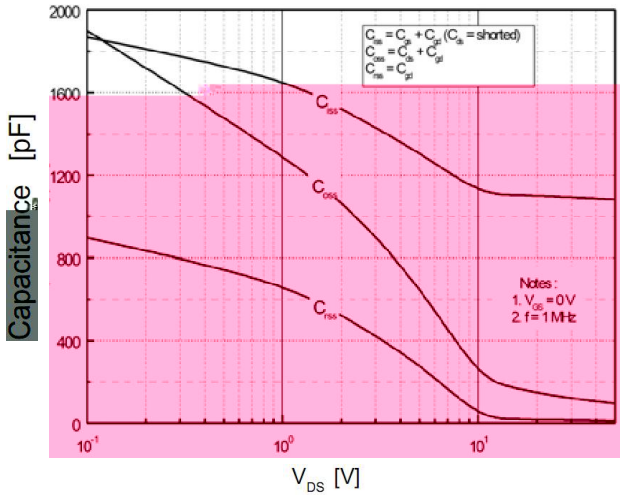
2000
1600
1200
800
400
0
Capacitance [pF]
C_{iss}
C_{oss}
C_{rss}
Notes:
1. V_{GS}=0V
2. f=1MHz
10^{-1}
10^{0}
10^{1}
V_{DS} [V]

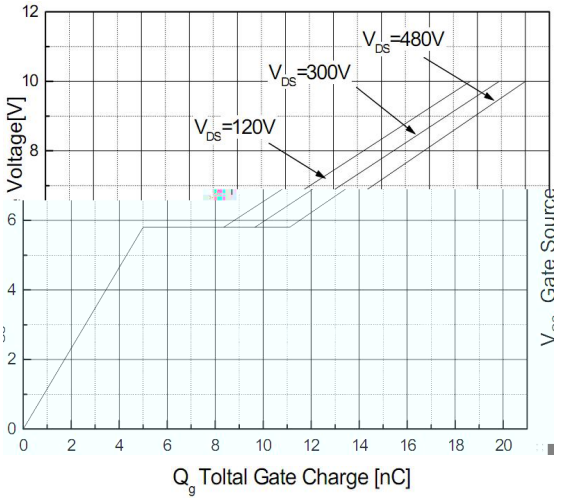
12
10
8
6
4
2
0
Voltage[V]
V_{DS}=480V
V_{DS}=300V
V_{DS}=120V
0
2
4
6
8
10
12
14
16
18
20
Q_g Toltal Gate Charge [nC]

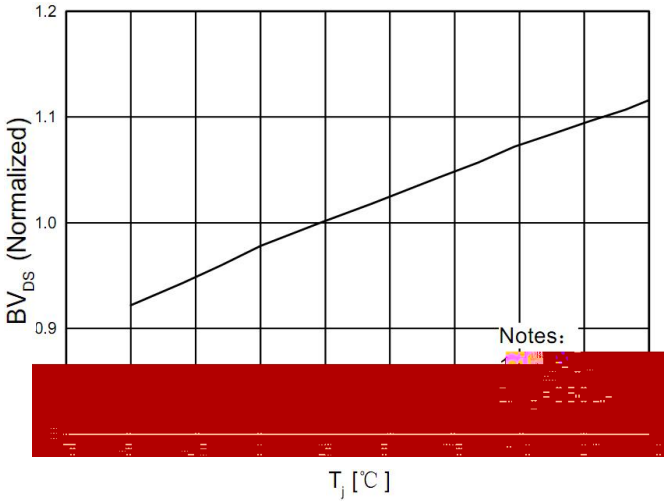
1.2
1.1
1.0
0.9
BVDS (Normalized)
Notes:
Tj [℃]

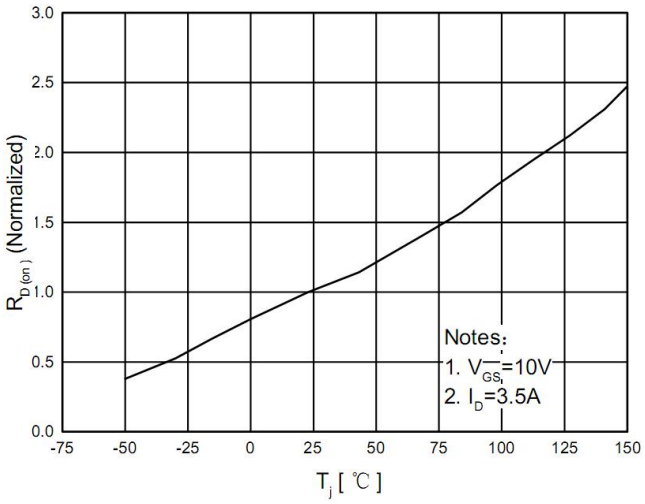
3.0
2.5
2.0
1.5
1.0
0.5
0.0
RD(on) (Normalized)
Notes:
1. VGS=10V
2. ID=3.5A
-75
-50
-25
0
25
50
75
100
125
150
Tj [℃]

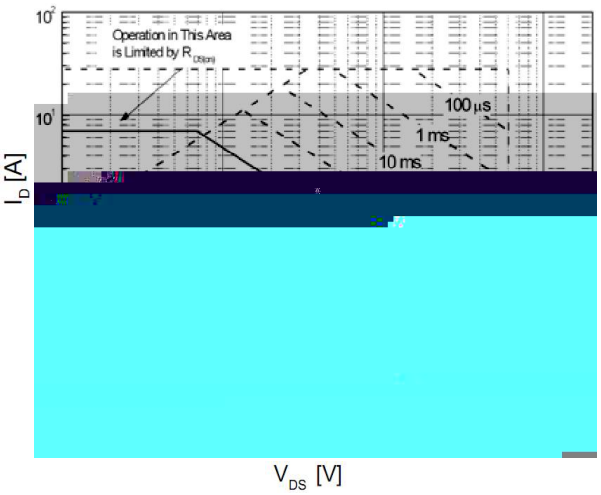
Operation in This Area
is Limited by RDS(on)
100 µs
1 ms
10 ms
ID [A]
VDS [V]

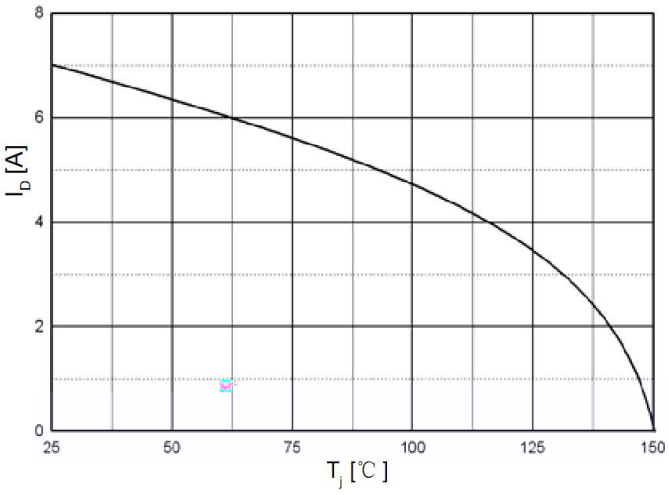
8
6
4
2
0
ID [A]
25
50
75
100
125
150
Tj [℃]

:

						× °	
						°	

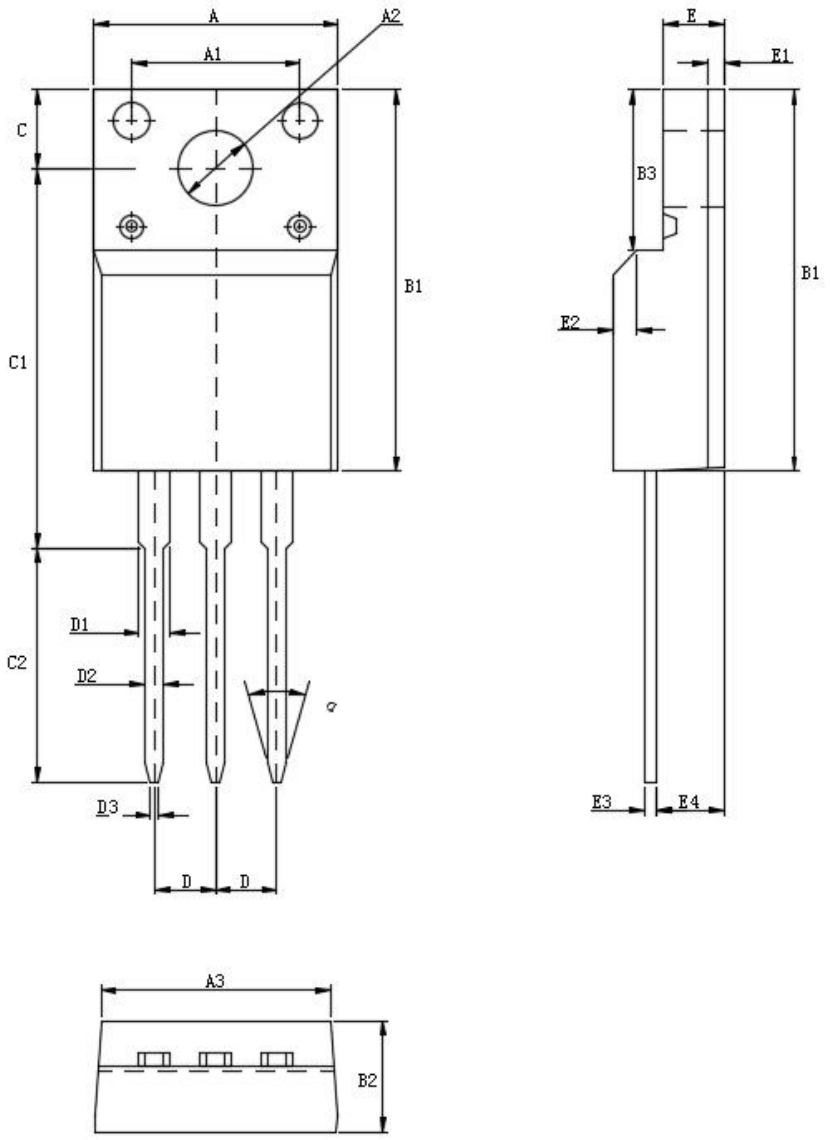
A
A2
A1
C
B1
C1
D1
C2
D2
D3
D
D
E
E1
B3
B1
E2
E3
E4
A3
B2